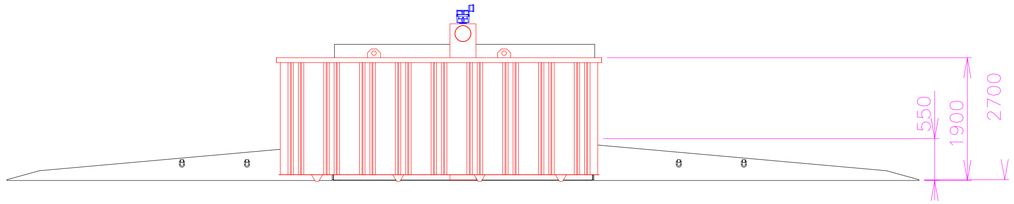

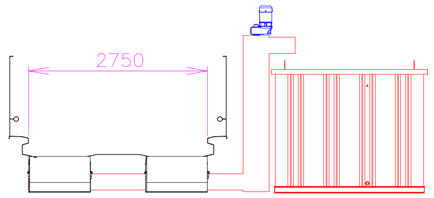

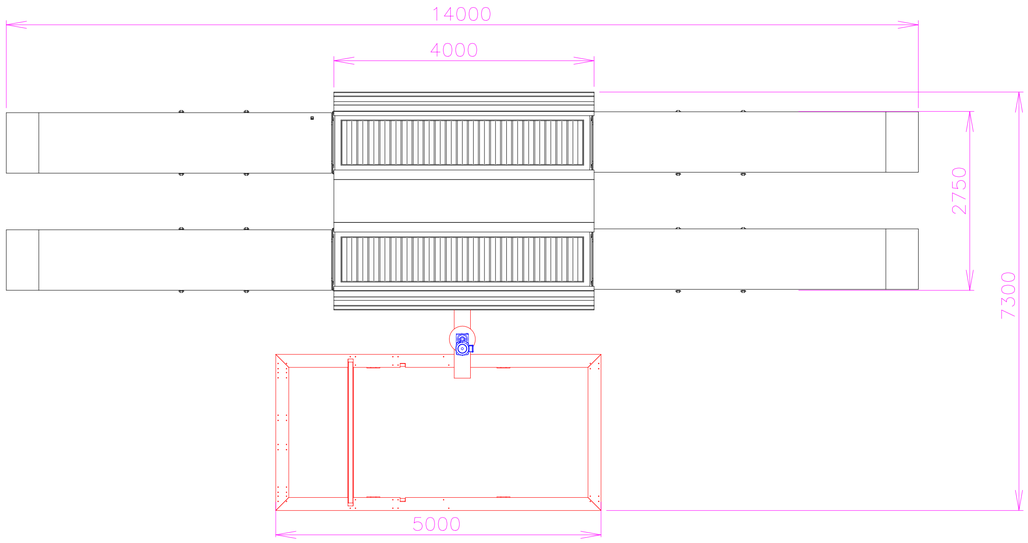

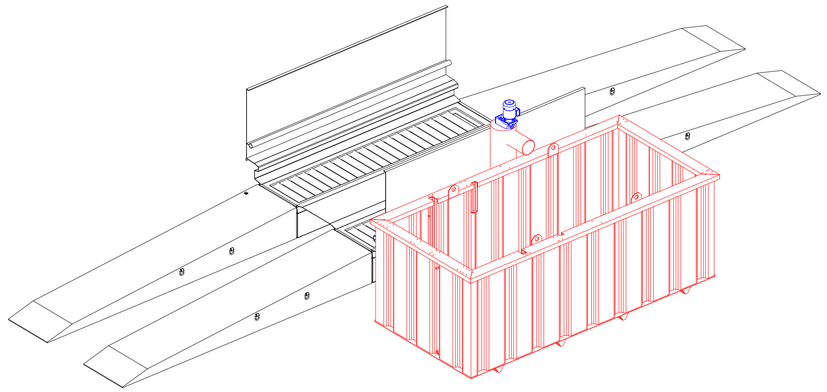

mistral®
pressure washers & wheel washers

+44 (0)1691 828 487